GB-101

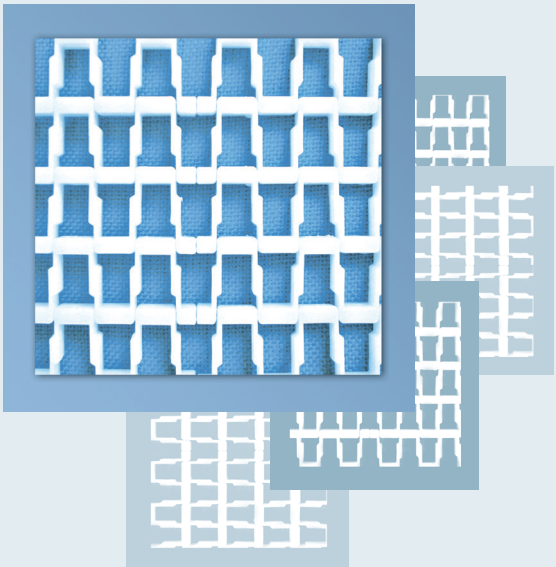

Belt Surface:	Open
Open Area:	62%, 16x25
Strength:	Medium & heavy application
Material/Colour:	POM/White, Green with Stainless steel wire 304/316
Cleanability:	Very good
Accessories:	40 mm flights
Application:	Bakery, packaging, vegetables, washing , cooling & freezing
Width interval:	33 mm

Standard measure of the belt
88
120
153
186
210
252
285
318
351
384
417
450
483
516
549
582
615
648
681
714
747
780
810
848
879
912
945
978
1011
1044
1077
1110
1143
1176
1209
1242
1275
1308
1341
1374
1407
1440
1473
1506
1538
1605
1638
1671
1704
1737
1770
1803
1838
1863
1992
1935
1968
2001
2034
2067
2100
2133

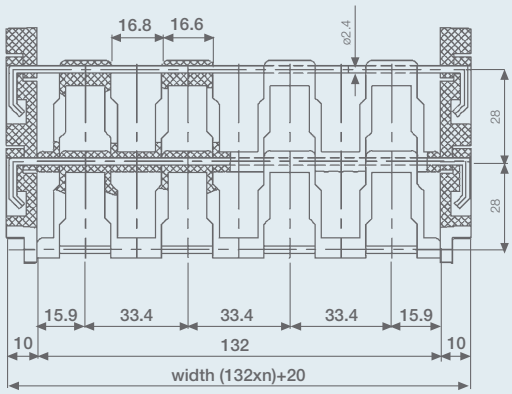

EASY TO CLEAN

BELT DATA

Materials	Max. belt pull kg/m of width	Belt weight kg/m²
Polyacetal (POM)	3000	5.9

SPROCKET DATA

No. of teeth Z	A=Outside diameter (mm)	B=Pitch diameter (mm)	C=Insede diameter (mm)
12	118.4	109.4	99.8
18	168.6	159.6	150

HUB SPECIFICATION
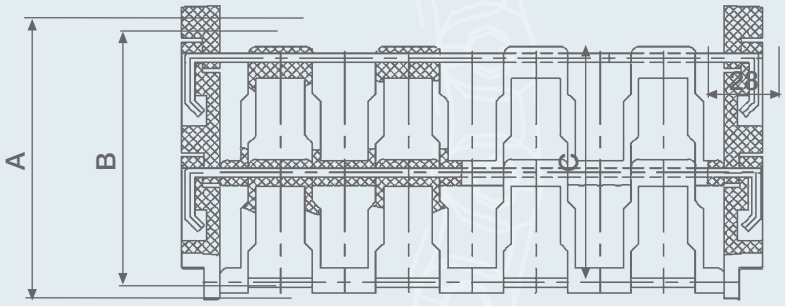
Hub width 16 mm	Number of teeth	
	12Z	18Z
Round bore (mm)	20	30
	25	35
	30	40
	35	45
		50
		55
		60